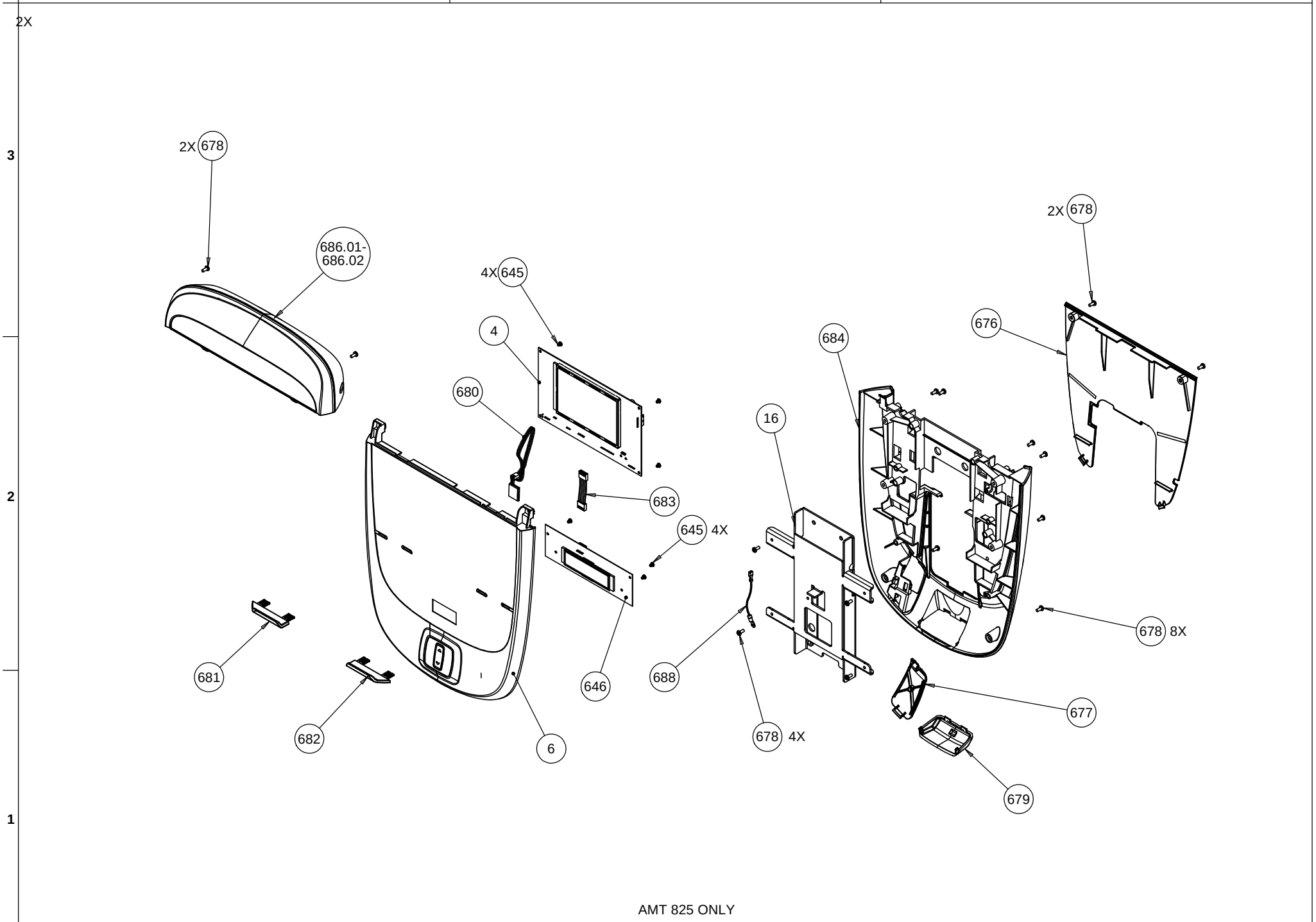

AMT 825 ONLY

PRODUCT: P20 CONSOLE						PRECOR®
DRWN BY	06.12.13	WDC	SIZE	PAGE OF	DWG. NO.	SUBREV
CS	05.06.13	BG	A	1 1	302719-101	A

P20, EFX, 821 (AMYB, AAFJ, AMXP)

Bubble Number	Part Number	Description
4	300232106	ASSY,PCA & SW,P20,EFX,V4
6	59224101	DISPLAY HOUSING, P20, EFX, 821, ASS
645	MGCN013025	SCREW,MCH,6-32X1/4,PANHD,PHIL,
646	300471401	PCA,METRICS,LCD MODULE,P20
648	300285102	WELDMENT,DISPLAY,PT - P10/P30/P20
676	300278101	PLASTIC, SERVICE COVER, DISPLAY, P2
677	300283101	PLASTIC, HR DOOR, P40/P20
678	MGCN016038	SCREW,MCH,8-32X3/8,PANHD,PHIL,
679	303806101	ASSY,REPLACEABLE,HP,AMBIENT,P80
680	300233101	ASSY,HEART RATE,5.5KHZ,5V,RECEIVER
681	303176101	SUPPORT,BOOK,LEFT,P30/P10
682	303176102	SUPPORT,BOOK,RIGHT,P30/P10
683	300462003	ASSY,CBL,6C .1 CTR, 1-6,SN,3"
684	300277103	PLASTIC, REAR, DISPLAY ,P40/P30/P20
685	40077131	KEY PANEL,MACHINE CTRL,P20,SINGLE
686.01	300205103	PRODUCT,BLANK CAP,P10/P20/P30/P40
688	40010008	ASSY,CBL,1C,20AWG,#8 RING/.110X032
706	301451026	ASSY,CBL,3P3C-6P3C(W/RAMP & RIBS),.
714	301149006	ASSY, CABLE, 8P2C/8P2C .1 CTR,,1-1,